Commercial Quick Ship Hercules VPL Approval Drawings

Shipping Information	
Contact	
Phone	
Address	
City	
Province/State	
Postal Code/ZIP	

Type of Delivery
◯ Pick-up at Terminal
◯ Loading Dock
◯ Liftgate - Ground Delivery
◯ Onsite Forklift
◯ Flatbed and Forklift

TOWER LOCATION (180° Configuration)

1. Configuration

◯ LEFT HAND

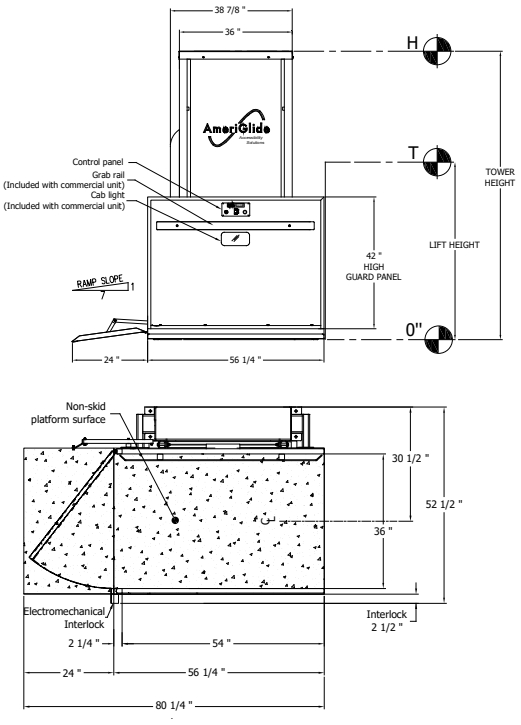

◯ RIGHT HAND

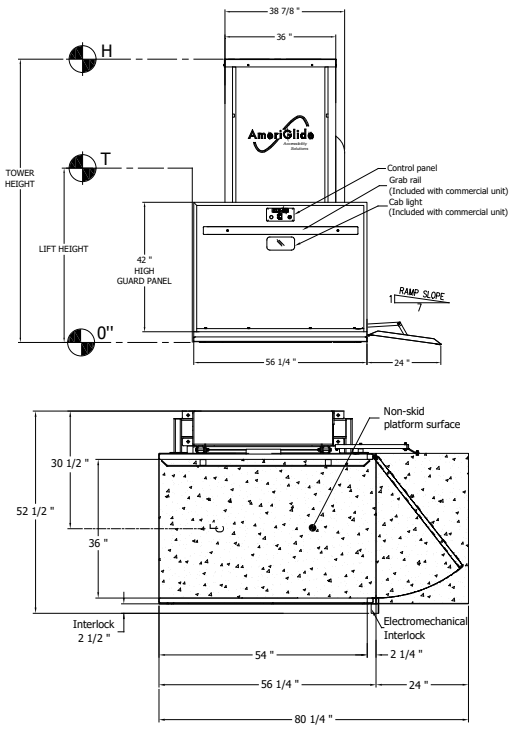

Notes

1. Platform lift, upper landing door/gate and interlock(s) must be installed by a trained and authorized installer.
2. All work and materials must comply to local laws and regulations.
3. This vertical platform lift is designed and built by AmeriGlide in accordance with the following codes: A18.1 2014 (See A18.1 Table 1.5-1), A117.1 2009, NFPA 70 2017.

***Disclaimer:** Configuration may require an enclosure - vary by local jurisdiction.*

Clear Form

CALL STATION TYPES

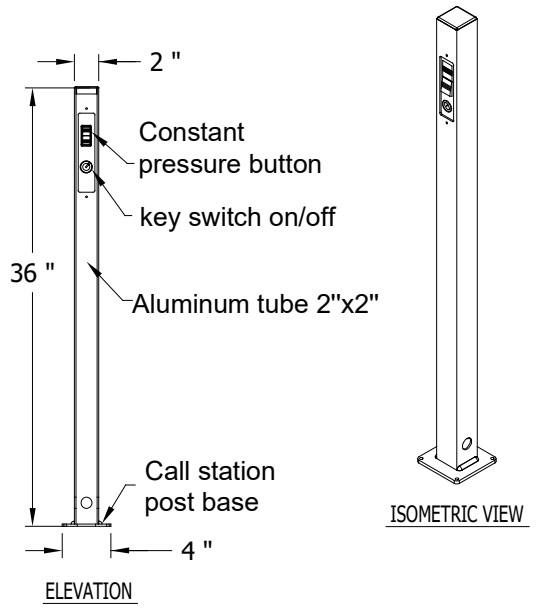

POST MOUNTED

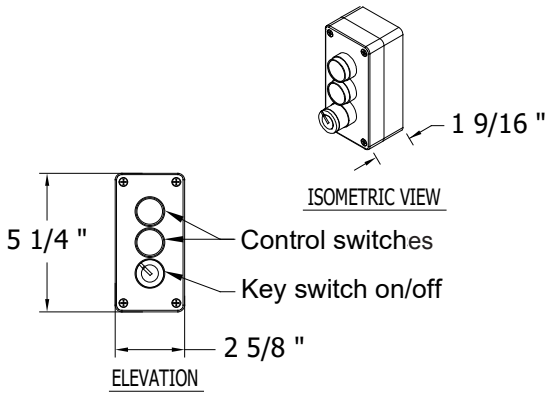

SURFACE MOUNTED

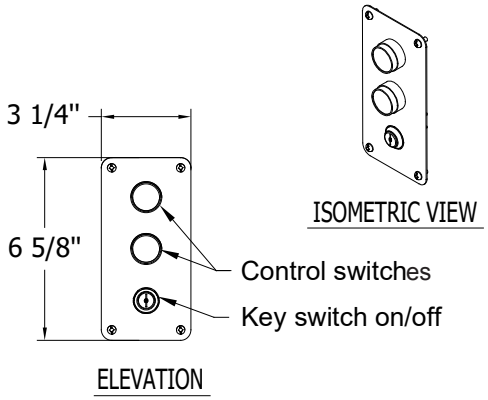

WALL MOUNTED

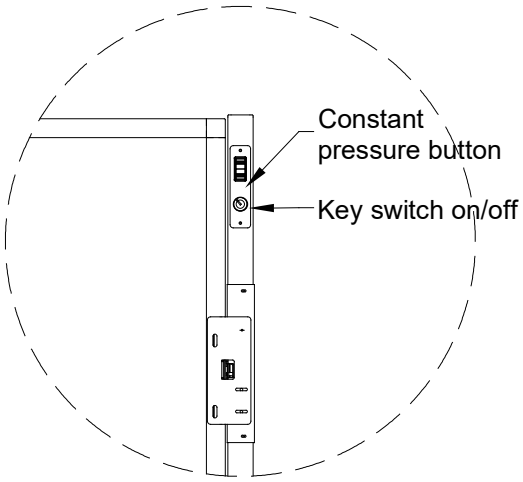

MOUNTED ON FRAME

2.1 Lower Landing Call Station

◯	CALL STATION POST MOUNTED
◯	CALL STATION SURFACE MOUNTED
◯	CALL STATION WALL MOUNTED
◯	NOT SUPPLIED BY AMERIGLIDE

2.2 Upper Landing Call Station

◯	CALL STATION POST MOUNTED
◯	CALL STATION SURFACE MOUNTED
◯	CALL STATION WALL MOUNTED
◯	CALL STATION MOUNTED ON FRAME
◯	NOT SUPPLIED BY AMERIGLIDE

UPPER LANDING GATE DIMENSIONS AND HANDING

3. Gates

Supplied by AmeriGlide

- ◯ RIGHT HAND GATE - 36” x 42”
- ◯ LEFT HAND GATE - 36” x 42”
- ◯ NOT SUPPLIED BY AMERIGLIDE

Accessories

- ◯ RIGHT HAND GATE (INTERLOCK ONLY)
- ◯ LEFT HAND GATE (INTERLOCK ONLY)
- ◯ AUTOMATIC LANDING GATE OPENER

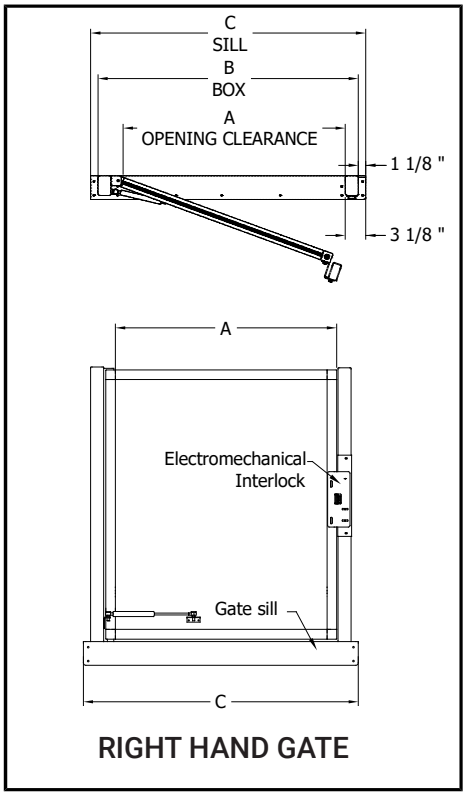

RIGHT HAND GATE

A	B	C
36"	42"	44 1/4"

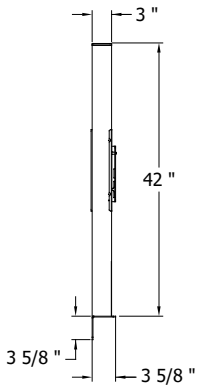

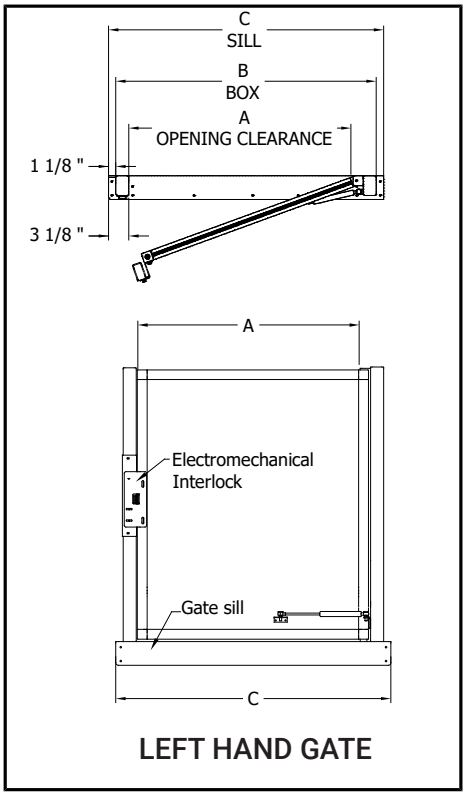

LEFT HAND GATE

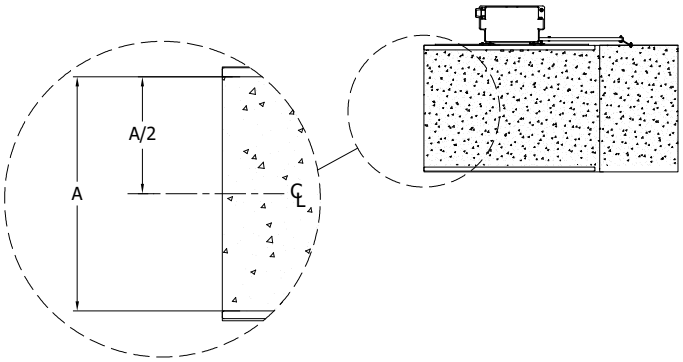

DETAIL

STANDARD INCLUSIONS

Each Residential VPL Kit includes the following:

Model:	Hercules
Dimension:	36W x 54”D x 42” H
Lifting height:	Up to 64”
Tower height:	92”
Capacity:	750 lbs
Speed:	9 FPM
Color:	Atlas Gray (RAL 7047)
Motor:	1.5 hp, 24VDC motor
Power supply:	120v/ 20A (2 x 12v gel batteries)
Safety Features:	Obstruction sensor underpan limit switches emergency stop emergency lowering slip-resistant floor key lock controls brass safety nut
Installation kit:	conductors wiring quick connectors hardware shims touch up paint

Safety Standards:

ASME A18.1

CSA B44.1 / ASME 17.5-elevator and escalator electrical equipment.

ICC A117.1 accessible and usable buildings and facilities (section 410)

Electrical number QAI: E10695

Shipping Details:

Dimensions - 1 Pallet:	97” x 49” x 49”
Weight:	1,100 lbs

PLATFORM LOADS

Notes

1. Structural support by others. pad construction requirement may vary from state. Dimensions given are AmeriGlide recommend clearances, reflecting running and access clearances. Consult local authority to assure compliance with state and local codes.
2. Wall below top landing to be solid, smooth, plumb and square.
3. Any alterations to equipment without written authorization by AmeriGlide will void warranties.
4. Per ASME A18.1 section 5.1.1.1 the runway shall be guarded at the upper landing by door or gate at least 42” (1067mm) high of solid construction and provided with a combination mechanical lock and electric contact. The door shall be permitted to be opened only if the platform floor is withing 2” (50mm) of that landing.

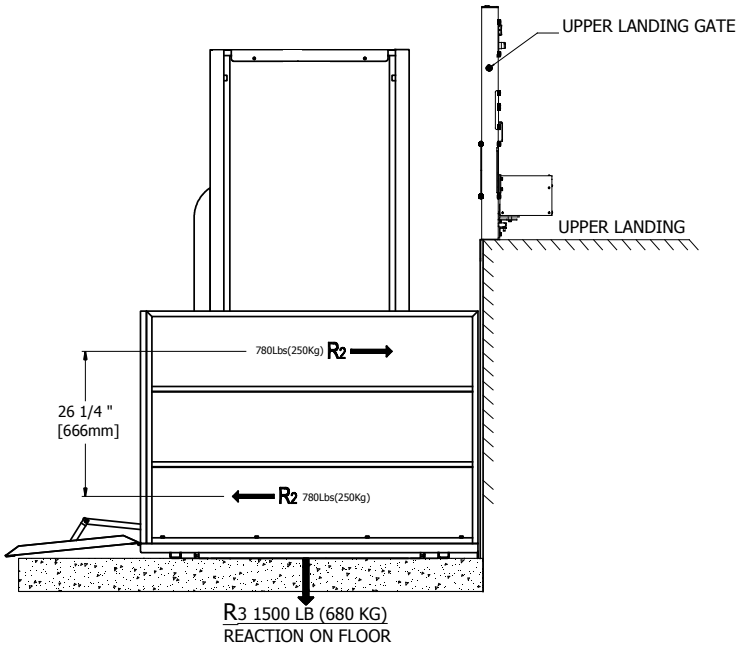

LOADS

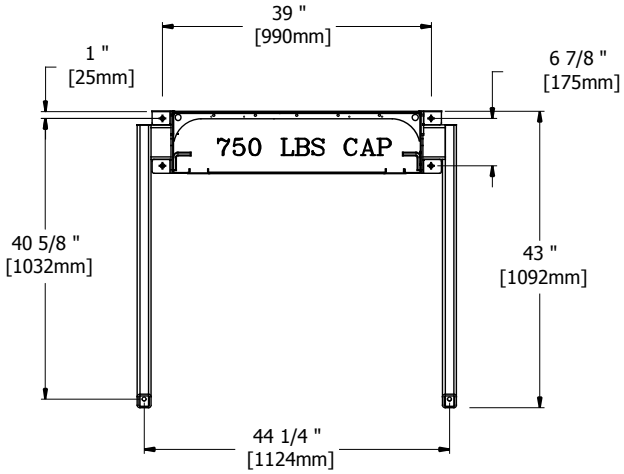

ANCHORING

JOB SITE REQUIREMENTS

Verify the Job Site Requirements

Upper landing side railings, without openings. To be installed after the lifting platform is in place. They must be able to hold the landing gate assembly.

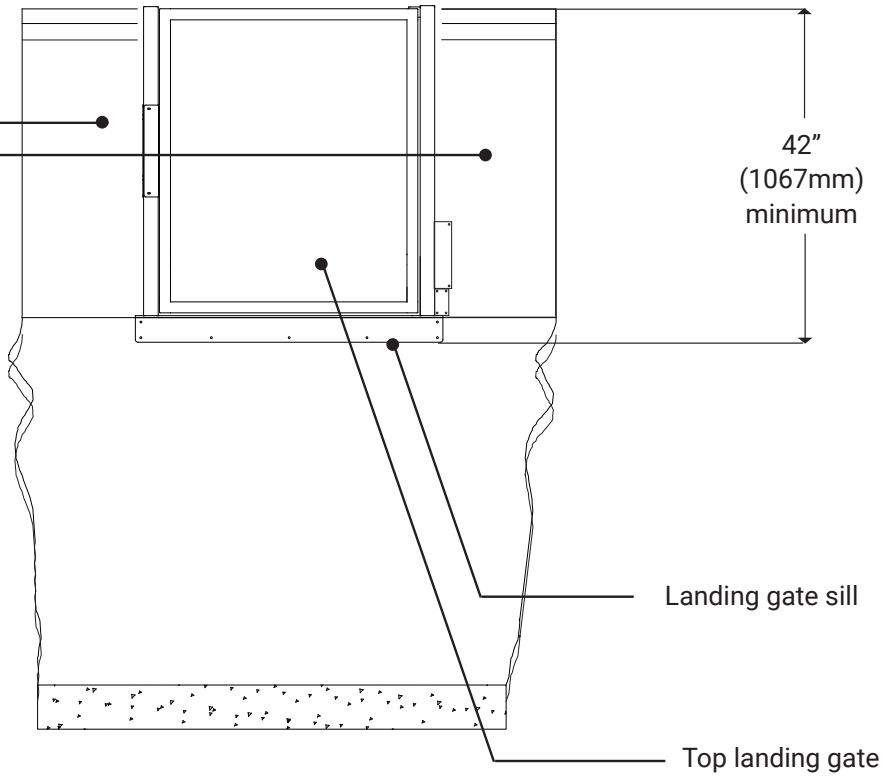

Runway must be smooth and extend 12” (single user) or 24” (user and attendee - unit with a platform gate and handrail) minimum on each side of landing gate. Otherwise, extend on all area.

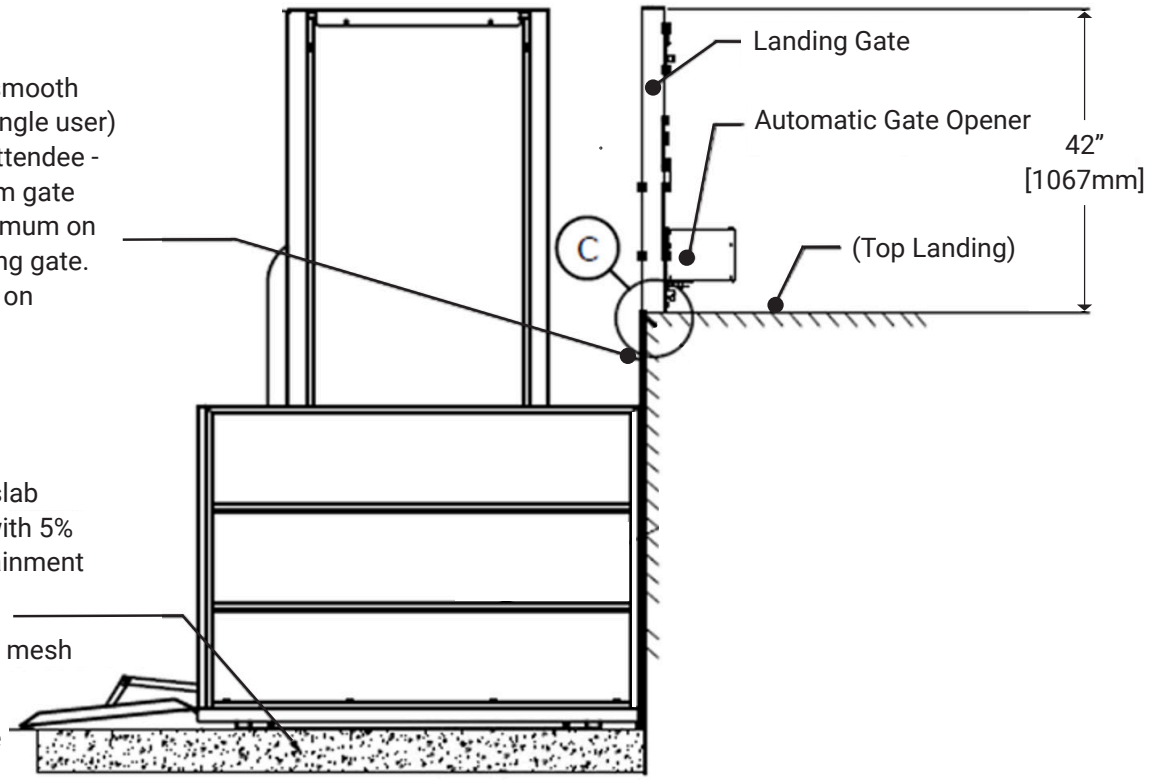

- 6” concrete slab min 25 MPa with 5% to 8% air entrainment

- #9, 6” x 6” reinforcement mesh

- 12” of 3/4” crushed stone

AmeriGlide Terms and Conditions

Acceptance

The Agreement shall consist only of AmeriGlide's offer and Purchaser's acceptance of the Order Form and these Terms and Conditions; nothing else shall form part of the Agreement or be binding on either Purchaser or AmeriGlide. It is AmeriGlide's responsibility to supply Purchaser with goods that comply with applicable law. Nothing in this Agreement limits Purchaser's non-waivable consumer or statutory rights. By accepting, Purchaser acknowledges it has read, understands, and agrees to be legally bound by the terms and conditions set out below. Unless otherwise stated, payment is due as follows: **100% payment upon signed acceptance.**

Payment

- Payment must be made by check or ACH bank transfer only unless otherwise agreed in writing. If credit card payment is requested and accepted, a 3% service charge will be added to the invoice.
- **Overdue Invoice; Default.** A service charge of 18% annually shall apply to any account past due more than thirty (30) days. Any account past due more than thirty (30) days, or any other failure by Purchaser to pay any amount when due, shall constitute a "Default."
- While Purchaser is in Default, AmeriGlide may, at its sole discretion, suspend warranty service, technical support, and other non-emergency services to the fullest extent permitted by law until the Default is cured.
- If payment remains unpaid for more than sixty (60) days after the applicable payment due date, all sums for the unexpired term of this Agreement shall become immediately due and payable without further notice or demand, and AmeriGlide may suspend all work, terminate this Agreement, or both.
- AmeriGlide reserves the right to deny delivery or turnover of equipment until payment in full.

Cancellation Charges

The following charges are applicable during the production process of items purchased:

25% of purchase value	Upon completion of engineering drawings
50% of purchase value	Once equipment enters production
80% of purchase value	Once production is 50% complete
100% of purchase value	Once production is 100% complete

Note: Once production of purchased equipment has been completed, the product is non-refundable and non-returnable, as products are custom-built. The parties agree that these cancellation charges are a reasonable estimate of AmeriGlide's damages and are not a penalty.

Specific Terms and Conditions

1. Responsibility of Purchaser

a. Purchaser shall inspect all equipment upon delivery, note visible damage or shortages on the carrier's Bill of Lading before acceptance, and notify AmeriGlide in writing of any shipping damage or shortage within forty-eight (48) hours after delivery. Failure to do so may waive or limit any such claim. Carrier-caused delays, damage, shortages, or other issues are outside AmeriGlide's control and responsibility. Purchaser shall notify AmeriGlide in writing of any other nonconformity or alleged manufacturing defect within ten (10) days of discovery and no later than thirty (30) days after installation; otherwise, the equipment shall be deemed accepted and operating as intended, and AmeriGlide shall have no responsibility for later-reported claims except to the extent required by applicable law.

b. Purchaser is responsible for unloading delivery. Delivery to a job site requires Purchaser to have a forklift available, or the product must be picked up at a local terminal; in some cases, not all customers can purchase forklift delivery. Purchaser assumes all risk of damage or injury arising from unloading.

c. If Purchaser requests a change in the delivery address after the product has shipped from the manufacturer, a minimum fee of $695 will be assessed to cover the associated administrative and logistical expenses incurred by AmeriGlide.

d. Purchaser is responsible for compliance with all local and state guidelines, including but not limited to, permitting, inspection, installation, and operation of AmeriGlide products, and for obtaining, maintaining, and renewing all pre-construction and post-construction permits mandated be applicable law.

e. By approving the shop drawings, Purchaser confirms that the dimensions shown are accurate based on the measurements and information provided or approved by Purchaser. Any costs resulting from inaccurate measurements provided or approved by Purchaser shall be the sole responsibility of Purchaser.

2. Terms and Conditions

a. **Indemnification.** In consideration of AmeriGlide Distributing 2019 performing the services specified herein, Purchaser expressly agrees to indemnify, defend, hold harmless, and release AmeriGlide Distributing 2019, its officers, and its employees from and against any and all claims, demands, suits, and proceedings of any nature whatsoever, including but not limited to loss, damage, injury, or death, alleged to have arisen from or in connection with the misuse, maintenance, operation, or condition of the equipment covered by this Agreement; provided that this obligation shall not extend to claims arising from AmeriGlide's own negligence.

b. Typical lead time for delivery can vary based on product, and all delivery dates are estimates only and are not guaranteed. AmeriGlide shall not be liable for delays beyond its reasonable control.

c. Production lead time begins upon receipt of signed approval drawings and execution of the Agreement terms.

d. A maximum of two (2) engineered drawing revisions are included in the price. Subsequent revisions are chargeable at $245 per change request.

e. Change orders must be communicated with a signed change order request document approved by both parties and may be subject to additional costs.

f. **Storage Fees.** Equipment may be stored for up to ten (10) business days after the requested equipment delivery date at no charge. Additional storage is available at $50/day.

g. **Attorneys' Fees.** If any action is commenced to enforce or interpret this Agreement, the prevailing party shall be entitled to recover its reasonable attorneys' fees, costs, and expenses.

h. **Limited Warranty (Consumer Products).** Notwithstanding any other provision in the Agreement, if the equipment is a "consumer product" under the Magnuson-Moss Warranty Act, AmeriGlide provides a limited warranty on all parts for two (2) years from the date of shipment, during which AmeriGlide will repair or replace defective parts subject to the terms of the written warranty provided to Purchaser. Any implied warranties, including merchantability and fitness for a particular purpose, are limited in duration to the two-year period of this limited warranty. Purchaser acknowledges receipt of the written limited warranty prior to execution of this Agreement.

i. **Limited Warranty (Commercial Products).** For commercial transactions, and to the fullest extent permitted by North Carolina law, AmeriGlide disclaims all implied warranties, including merchantability and fitness for a particular purpose.

j. Installation must be completed by a trained, licensed professional. Failure to use a trained, licensed professional may result in the voiding of any express or waivable implied warranty rights.

k. Any **third-party installation** (installation completed by anyone other than AmeriGlide Distributing 2019 or its agent and paid separately from this Agreement) comes with one hour of free technical service. Each call is counted as a minimum 15-minute call. All technical service calls after the included hour are billed at $200 per hour, with a minimum call/charge of $50.00 for 15 minutes. This does not include initial hold time and must be paid in advance on a valid credit card. All technical service call fees are non-refundable.

l. Any **third-party installation** (as indicated above) waives Purchaser's claims against AmeriGlide for component breakage, injury related to use, or damage related to third parties, including any prejudice, delays, or malfunctions of the product arising from improper installation by that third party; provided that this waiver does not apply to defects in the equipment or AmeriGlide's own negligence.

m. **Limitation of Liability.** To the maximum extent permitted by law, AmeriGlide shall not be liable for any indirect, incidental, consequential, special, or punitive damages, and AmeriGlide's total liability arising out of or relating to this Agreement shall not exceed the amount paid by Purchaser for the equipment. This limitation does not apply to personal injury or to liability for gross negligence, willful misconduct, or fraud.

n. **Ownership.** Until the product is fully paid for, the product shall remain the property of AmeriGlide Distributing 2019 ("AmeriGlide"), which retains a purchase money security interest in the product and may file UCC-1 financing statements. If full payment is not received in accordance with the agreed terms, AmeriGlide reserves the right to repossess the product and exercise all remedies available, subject to any notice required by applicable law. Purchaser acknowledges and agrees that AmeriGlide has a security interest in the product until full payment is received.

o. **Choice of Law and Forum.** This Agreement shall be governed by and construed in accordance with the laws of the State of North Carolina, without regard to its conflict-of-laws principles. Any action, suit, or proceeding arising out of or relating to this Agreement shall be brought exclusively in the General Court of Justice, Superior Court Division, Wake County, North Carolina. Each party irrevocably submits to the jurisdiction of that court and waives any objection based on improper venue or forum non conveniens.

p. **Severability.** If any provision of this Agreement is held invalid, illegal, or unenforceable by a court of competent jurisdiction, that provision shall be modified to the minimum extent necessary to make it enforceable, or if it cannot be so modified, severed from this Agreement, and the remaining provisions shall remain in full force and effect.

By signing this Agreement, Purchaser agrees to the drawings detailed in the previous pages and acknowledges and agrees to the terms and conditions set out above.

Purchaser Signature: _____ Date: _____

Printed Name: _____ Title: _____

AmeriGlide
ACCESSIBILITY SOLUTIONS

139_AMG Commercial Hercules QS VPL_Approval Drawings_rev092926